OFFICE OF ZONING AND DEVELOPMENT
55 Trinity Avenue S.W., Suite 3350
Atlanta, Georgia 30303
(404) 330-6145

APPLICATION #: **V-26-126**

DATE ACCEPTED: **08/05/2026**

NOTICE TO APPLICANT

Address of Property:
608 Hardendorf AVE NE

V-26-126

City of Atlanta | Department of City Planning
OFFICE OF ZONING & DEVELOPMENT
RECEIVED
DATE: 8/5/2026

City Council District: **5** Neighborhood Planning Unit (NPU): **N**

Board of Zoning Adjustment (BZA) Hearing Date:

Thursday, October 01, 2026 at 12:00 p.m.

Council Chambers, 2nd Floor, City Hall
55 Trinity Avenue, S.W.

The contact person for NPU N is:

Amy Stout
404-392-3422
npunchair@gmail.com

Contact info for adjacent NPUs is provided below if necessary:

Please click the link below to access the directory designated as the "meeting location."

www.atlantaga.gov/government/departments/city-planning/neighborhood-planning-units/neighborhood-and-npu-contacts

Please contact the person(s) listed above within five days to find out which meetings you will be required to attend before the next NPU meeting. If you are unable to reach the contact person, please call the city's NPU Coordinator at 404-330-6637.

Signed,

Viana McCullum
NM, for Director, Office of Zoning and Development

Eli Awbrey

City of Atlanta
Department of City Planning
Office of Zoning and Development
55 Trinity Avenue, Suite 3350
Atlanta, Georgia 30303
Phone: 404-330-6145

BOARD OF ZONING ADJUSTMENT (BZA) REFERRAL FORM

DATE ISSUED: September 21, 2026

COUNCIL DISTRICT **5** NPU **N** APPLICATION NUMBER V-26-126

Eli Awbrey
Name of Applicant

SCOPE OF WORK

Construction of a 16 x 12 ft covered screened porch with fireplace and concrete patio

at 608 Hardendorf Avenue NE 15-239
Street Address **Quadrant** **District & Land Lot**

to be used for **Residential** purposes. The property is zoned **R-4 (Single Family Residential)**

2. Prior to the issuance of a Building Permit, the applicant must seek a variance/special exception for the following reasons:

Applicant seeks a **variance** from the zoning ordinance to (1) exceed the maximum lot coverage from the required 50% to 62.77%.

The Applicant has not requested additional variances/special exceptions based on application materials submitted.

1982 ZONING ORDINANCE, AS AMENDED

Chapter & Section: Chapter 6 Sec. 16-06.008(6)

Anna Williams 9/21/26
Plan Reviewer Date

Eli Awbrey 9/21/26
Applicant Date

APPLICATION FOR BOARD OF ZONING ADJUSTMENT

Please mark "X" next to the type of application(s) you are submitt

Variance	X
Special Exception	
Variance & Special Exception	

V-26-126

City of Atlanta | Department of City Planning
OFFICE OF ZONING & DEVELOPMENT
RECEIVED
DATE: 8/5/2026

No.:

Date Filed August 3, 2026 Application Number

Name of Applicant Eli Awbrey Daytime Phone 678-850-7696

Company Name (if applicable) _____ email eli.w.awbrey@gmail.com

Address 608 Hardendorf Ave NE, Atlanta, GA 30307
street city state zip code

Name of Property Owner Eli Awbrey and Wrenn Awbrey Phone 678-850-7696

Address 608 Hardendorf Ave NE, Atlanta, GA 30307
street city state zip code

Description of Property

Address of Property 608 Hardendorf Ave NE, Atlanta, GA 30307
street city state zip code

Area: 0.172 ac Land Lot: 239 District: 15th, DeKalb County, GA.

Property is zoned: R-4, Council District: D-5, Neighborhood Planning Unit (NPU): N

TO THE BOARD OF ZONING ADJUSTMENT: Applicant, having received a preliminary plan review from the Office of Zoning and Development prior to seeking a building permit or certificate of occupancy, hereby requests that the Board of Zoning Adjustment grant a Variance or Special Exception.

I hereby authorize the staff of the Office of Zoning and Development to inspect the premises of the above-described property. I understand that it is my responsibility to post a public notice sign on the property according to the instructions given to me by the Office of Zoning and Development upon filing this application. I swear that all statements herein and attached hereto are true and correct to the best of my knowledge and belief.

Eli Awbrey
Owner or Agent for Owner (Applicant)

Eli Awbrey
Print Name of Owner

Sworn To And Subscribed Before Me This 3rd Day Of August 2026.

Stephanie Morgan
NOTARY PUBLIC

STEPHANIE MORGAN
My Commission Expires
NOTARY PUBLIC
01-25-2028
MADISON COUNTY, GEORGIA

SUMMARY & JUSTIFICATION FOR VARIANCES

Directions: Complete responses must be provided for ALL questions. Incomplete applications will not be accepted. The space below may be utilized or responses may be submitted as a separate attachment. Specific criteria for Board approval of variances may be found on page 7. **The justification must address the criteria.** Please submit a typewritten or legible justification.

Is the property described in this application subject to a pending application or ordinance for a Rezoning or Special Use Permit? _____YES X____NO. **(If yes, the variance/special exception request will be rescheduled to a hearing following the final approval by City Council & the Mayor).** Please provide the relevant zoning application number associated with the subject property: _____.

Summary of proposed construction changes to buildings or site (shall not replace submittal of written criteria). (Examples: "Convert a 100' x 200' retail space into a restaurant." "Install a 6-foot high opaque wooden wall ('privacy fence' with 6-foot high opaque wall gates.").
Remove gazebo and concrete pavers in backyard, then construct approximately 16-ft by 12-foot covered, screened porch with fireplace on concrete patio.

Proposed Lot Coverage (After Construction): Calculate total amount of lot coverage on entire property, after completion of proposed construction, including existing and proposed buildings and other structures; sidewalks, driveways, parking pads, patios, gravel, etc.; everything except natural planted or undisturbed areas.

4,702 covered square feet / 7,490 total lot square feet = 62.77 % proposed lot coverage

50 % maximum allowed lot coverage

Variance Criteria ***(see page 6 for detailed criteria)*****:**

1) What are the extraordinary and exceptional conditions pertaining to the particular piece of property in question (size, shape or topography)? The property slopes steeply downward from the back of the lot to the front of the lot. This requires a retaining wall to hold back the steep earth, & multiple sets of stairs to climb the slope from the street to the front door. The wall & stairs eat into the impervious allowance. The lot is small & narrow (grandfathered for lot size & frontage), so construction of even a modest sized house alone would exceed the impervious allowance.

2) How would the application of the Zoning Ordinance of the City of Atlanta to this particular piece of property create an unnecessary hardship? Inability to construct screened porch, a reasonable amenity which many homes in the neighborhood have, even though the project will not increase the impervious surface on the property—in fact, we removed 503 SF of concrete pavers and gazebo to construct this project, actually reducing the impervious surface %.

3) What conditions are peculiar to this particular piece of property? This property is uniquely steep and narrow—most of the other properties in this neighborhood are less steep and wider. This property's unique steepness and narrowness make it difficult to comply with the impervious surface requirements for the reasons stated in item 1.

4) Submit facts to show that relief, if granted, would not cause substantial detriment to the public good or impair the purposes and intent of the Zoning Ordinance of the City of Atlanta. This project actually reduces the amount of impervious surface on the property by removing 503 SF of concrete pavers ("rear walk" on prior survey, which we can provide as needed) and gazebo, and makes use of the existing rear concrete pad which was previously for vehicle parking.
If anything, the reduced impervious surface will improve drainage and reduce runoff to neighbors, thereby serving the public good and advancing the purposes and intent of the City's zoning ordinance.

LEGEND

RBF	REBAR FOUND (1/2" REBAR)
CRS	CAPPED REBAR SET (1/2" REBAR)
CRBF	CAPPED REBAR FOUND
OTF	OPEN TOP FOUND
CTF	CRIMP TOP FOUND
☼	LIGHT POLE
BL	BUILDING LINE
C.L.F	CHAIN LINK FENCE
R/W	RIGHT-OF-WAY
TPED	PHONE PEDASTAL
CATV	CABLE BOX
WM	WATER METER
☐PB	TRANSFORMER
(12.34'D)	DEED DISTANCE
12.34'(M)	MEASURED DISTANCE
DE	DRAINAGE EASEMENT
SSE	SEWER EASEMENT
HW	HEADWALL
JB	JUNCTION BOX
CB	CATCH BASIN
P	PORCH
C/P	CARPORT

V-26-126

City of Atlanta | Department of City Planning
OFFICE OF ZONING & DEVELOPMENT
RECEIVED
DATE: 8/5/2026

EXISTING LOT COVERAGE:
HOUSE-1,769 SF
STONE PATIO-255 SF
FRONT WALK-172 SF
WALLS-240 SF
TURF-238 SF
GRAVEL WALK-66 SF
GARAGE-335 SF
GARAGE STOOP-13 SF
BRICK STOOP-11 SF
STONE STOOP-14 SF
DRIVEWAY-1552 SF
TOTAL-4665 SF

4665/7,490=62.3%

ZONING: R-4

MIN. LOT AREA: 9,000 SF
MIN LOT FRONTAGE: 70'

SETBACKS:
FRONT-35 FEET
SIDE-7 FEET
REAR-15 FEET

MAXIMUM LOT COVERAGE: 50%

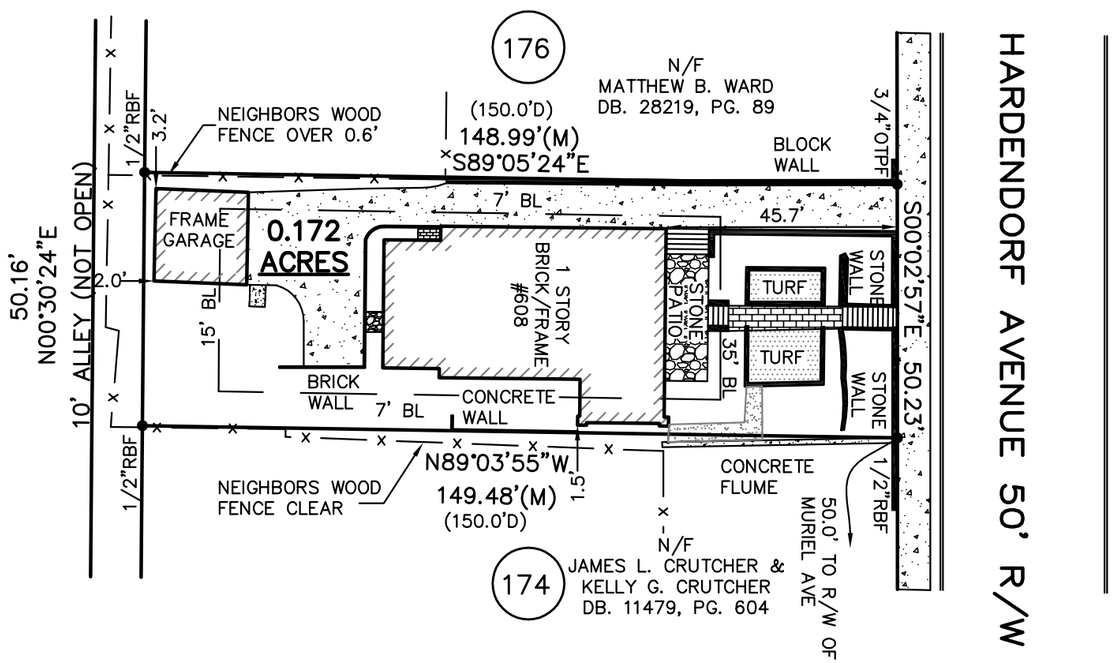

BASED ON SE BEARING PER PLAT

GENERAL NOTES

THIS PLAT HAS BEEN CALCULATED FOR CLOSURE BY LATITUDES AND DEPARTURES AND IS FOUND ACCURATE TO WITHIN ONE FOOT IN 176,371 FEET.

THE FIELD DATA UPON WHICH THIS PLAT IS BASED HAS A CLOSURE PRECISION OF ONE FOOT IN 10,000+ FEET AND AN ANGULAR ERROR OF 02" PER ANGLE POINT AND WAS ADJUSTED USING COMPASS RULE.

A NIKON – TOTAL STATION WAS USED TO OBTAIN THE LINEAR AND ANGULAR MEASUREMENTS USED IN THE PREPARATION OF THIS PLAT.

FENCES SHOULD NOT BE PLACED USING SIDE DIMENSIONS FROM HOUSE OR STRUCTURE.

CERTIFICATION IS MADE TO PERSON(S) NAMED ON THIS PLAT AND IS NOT TRANSFERABLE TO OTHERS.

UTILITIES SHOWN ARE LOCATIONS OF GROUND IDENTIFIABLE ITEMS. ADDITIONAL UTILITES MAY EXIST ABOVE OR BELOW GROUND. THE SURVEYOR ACCEPTS NO RESPONSIBILTY FOR THE COMPLETENESS OF THIS DATA.

THIS PROPERTY IS SUBJECT TO ALL RIGHT OF WAYS AND EASEMENTS SHOWN OR NOT SHOWN, RECORDED OR UNRECORDED

FLOOD NOTE:

BASED ON GRAPHIC DETERMINATION, THIS PROPERTY DOES NOT LIE WITHIN A FEMA/FIRM SPECIAL FLOOD HAZARD AREA PER COMMUNITY PANEL NO. 13089C0064K DATED 8/15/19.

GEORGIA REGISTERED No. 2576 LAND SURVEYOR JOHN A. STEERMAN
7/23/26

IN MY OPINION, THIS PLAT IS A CORRECT REPRESENTATION OF THE LAND PLATTED AND HAS BEEN PREPARED IN CONFORMITY WITH THE MINIMUM STANDARDS AND REQUIREMENTS OF LAW.

NOTE: THE PUBLIC RECORDS REFERENCED HEREON REFLECT ONLY THOSE RECORDS NECESSARY TO ESTABLISH THE BOUNDARIES SHOWN HEREON, AND REFERENCE TO THE SAME DOES NOT AND IS NOT INTENDED TO CONSTITUTE A TITLE SEARCH OR OPINION. EASEMENTS OR OTHER ENCUMBRANCES MAY EXIST ON PUBLIC RECORD BUT NOT BE SHOWN HEREON.

SCI Development Services
ENGINEERS - SURVEYORS - LAND PLANNERS
2020 WESTSIDE COURT-STE E-SNELLVILLE GEORGIA 30078
(770) 736-7666 FAX (770) 736-4623
MAIL@SURVEYCONCEPTS.NET

PROJECT: 57050
DWG BY: DCP
CHKD BY: JAS
DATE: 7/23/26
SCALE: 1"=30'

SURVEY FOR:
ELI AWBREY
LOT 175
SUBDIVISION: EDGEWOOD PARK REALTY
LAND LOT 239 15th DISTRICT
CITY OF ATLANTA
DEKALB COUNTY, GEORGIA
REFERENCED IN PLAT BOOK 3-K, PAGE 403 &
DEED BOOK 27576, PG. 101

LEGEND

RBF	REBAR FOUND (1/2" REBAR)
CRS	CAPPED REBAR SET (1/2" REBAR)
CRBF	CAPPED REBAR FOUND
OTF	OPEN TOP FOUND
CTF	CRIMP TOP FOUND
☼	LIGHT POLE
BL	BUILDING LINE
C.L.F	CHAIN LINK FENCE
R/W	RIGHT-OF-WAY
TPED	PHONE PEDASTAL
CATV	CABLE BOX
WM	WATER METER
☐PB	TRANSFORMER
(12.34'D)	DEED DISTANCE
12.34'(M)	MEASURED DISTANCE
DE	DRAINAGE EASEMENT
SSE	SEWER EASEMENT
HW	HEADWALL
JB	JUNCTION BOX
CB	CATCH BASIN
P	PORCH
C/P	CARPORT

EXISTING LOT COVERAGE:
HOUSE-1,769 SF
STONE PATIO-255 SF
FRONT WALK-172 SF
WALLS-240 SF
TURF-238 SF
GRAVEL WALK-66 SF
GARAGE-335 SF
GARAGE STOOP-13 SF
BRICK STOOP-11 SF
STONE STOOP-14 SF
DRIVEWAY-1552 SF
TOTAL-4665 SF

4665/7,490=62.3%

PROPOSED LOT COVERAGE:
HOUSE-1,769 SF
STONE PATIO-255 SF
FRONT WALK-172 SF
WALLS-231 SF
TURF-238 SF
GRAVEL WALK-66 SF
GARAGE-335 SF
GARAGE STOOP-13 SF
BRICK STOOP-11 SF
DRIVEWAY-1412 SF
PROPOSED PORCH-200 SF
TOTAL-4702 SF

4702/7,490=62.77%

ZONING: R-4

MIN. LOT AREA: 9,000 SF
MIN LOT FRONTAGE: 70'

SETBACKS:
FRONT-35 FEET
SIDE-7 FEET
REAR-15 FEET

MAXIMUM LOT COVERAGE: 50%

V-26-126

City of Atlanta | Department of City Planning
OFFICE OF ZONING & DEVELOPMENT
RECEIVED
DATE: 9/17/26

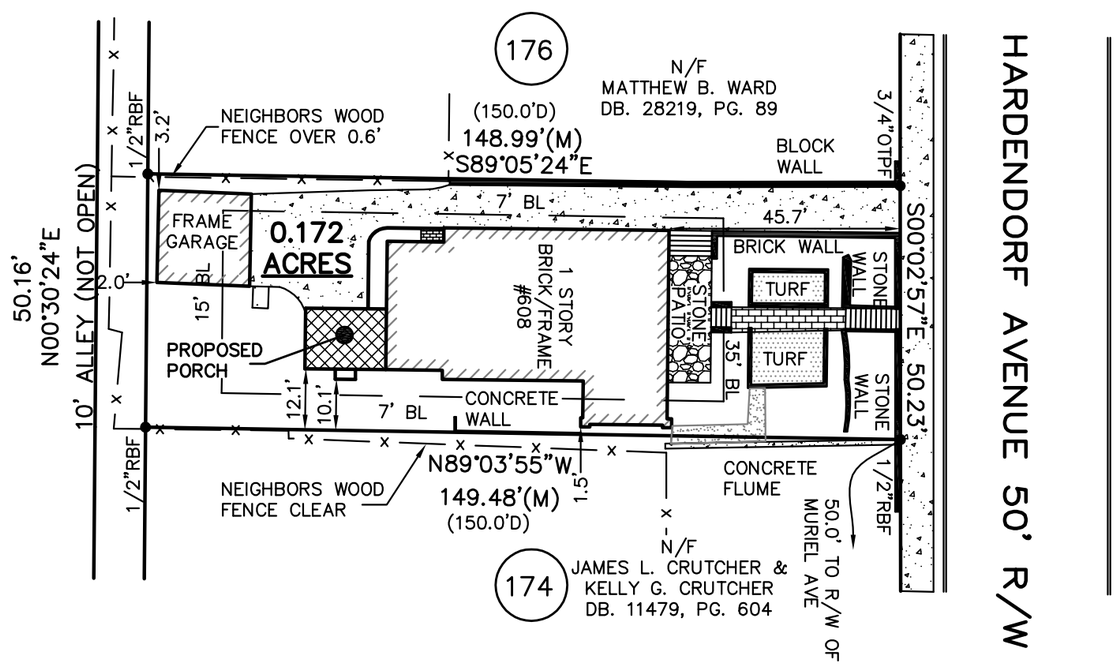

BASED ON SE BEARING PER PLAT

GENERAL NOTES

THIS PLAT HAS BEEN CALCULATED FOR CLOSURE BY LATITUDES AND DEPARTURES AND IS FOUND ACCURATE TO WITHIN ONE FOOT IN 176.371 FEET.

THE FIELD DATA UPON WHICH THIS PLAT IS BASED HAS A CLOSURE PRECISION OF ONE FOOT IN 10,000+ FEET AND AN ANGULAR ERROR OF 02" PER ANGLE POINT AND WAS ADJUSTED USING COMPASS RULE.

A NIKON – TOTAL STATION WAS USED TO OBTAIN THE LINEAR AND ANGULAR MEASUREMENTS USED IN THE PREPARATION OF THIS PLAT.

FENCES SHOULD NOT BE PLACED USING SIDE DIMENSIONS FROM HOUSE OR STRUCTURE.

CERTIFICATION IS MADE TO PERSON(S) NAMED ON THIS PLAT AND IS NOT TRANSFERABLE TO OTHERS.

UTILITIES SHOWN ARE LOCATIONS OF GROUND IDENTIFIABLE ITEMS. ADDITIONAL UTILITES MAY EXIST ABOVE OR BELOW GROUND. THE SURVEYOR ACCEPTS NO RESPONSIBILTY FOR THE COMPLETENESS OF THIS DATA.

THIS PROPERTY IS SUBJECT TO ALL RIGHT OF WAYS AND EASEMENTS SHOWN OR NOT SHOWN, RECORDED OR UNRECORDED

FLOOD NOTE:

BASED ON GRAPHIC DETERMINATION, THIS PROPERTY DOES NOT LIE WITHIN A FEMA/FIRM SPECIAL FLOOD HAZARD AREA PER COMMUNITY PANEL NO. 13089C0064K DATED 8/15/19.

GEORGIA REGISTERED No. 2576 LAND SURVEYOR JOHN A. STEERMAN 7/24/26

IN MY OPINION, THIS PLAT IS A CORRECT REPRESENTATION OF THE LAND PLATTED AND HAS BEEN PREPARED IN CONFORMITY WITH THE MINIMUM STANDARDS AND REQUIREMENTS OF LAW.

NOTE: THE PUBLIC RECORDS REFERENCED HEREON REFLECT ONLY THOSE RECORDS NECESSARY TO ESTABLISH THE BOUNDARIES SHOWN HEREON, AND REFERENCE TO THE SAME DOES NOT AND IS NOT INTENDED TO CONSTITUTE A TITLE SEARCH OR OPINION. EASEMENTS OR OTHER ENCUMBRANCES MAY EXIST ON PUBLIC RECORD BUT NOT BE SHOWN HEREON.

SCI Development Services
ENGINEERS - SURVEYORS - LAND PLANNERS
2020 WESTSIDE COURT-STE E-SNELLVILLE GEORGIA 30078
(770) 736-7666 FAX (770) 736-4623
MAIL@SURVEYCONCEPTS.NET

PROJECT: 57050
DWG BY: DCP
CHKD BY: JAS
DATE: 7/23/26
SCALE: 1"=30'

SITE PLAN FOR:
ELI AWBREY
LOT 175
SUBDIVISION: EDGEWOOD PARK REALTY
LAND LOT 239 15th DISTRICT
CITY OF ATLANTA
DEKALB COUNTY, GEORGIA
REFERENCED IN PLAT BOOK 3-K, PAGE 403 &
DEED BOOK 27576, PG. 101

FOOTING DETAILS

PROPOSED
FLOOR PLAN

608 HARDENDORF AVE N.E

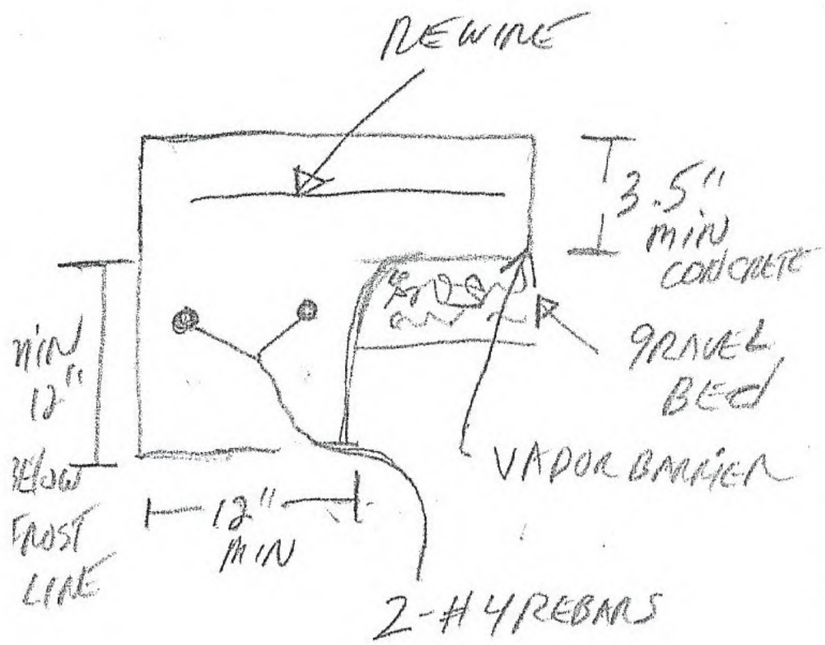

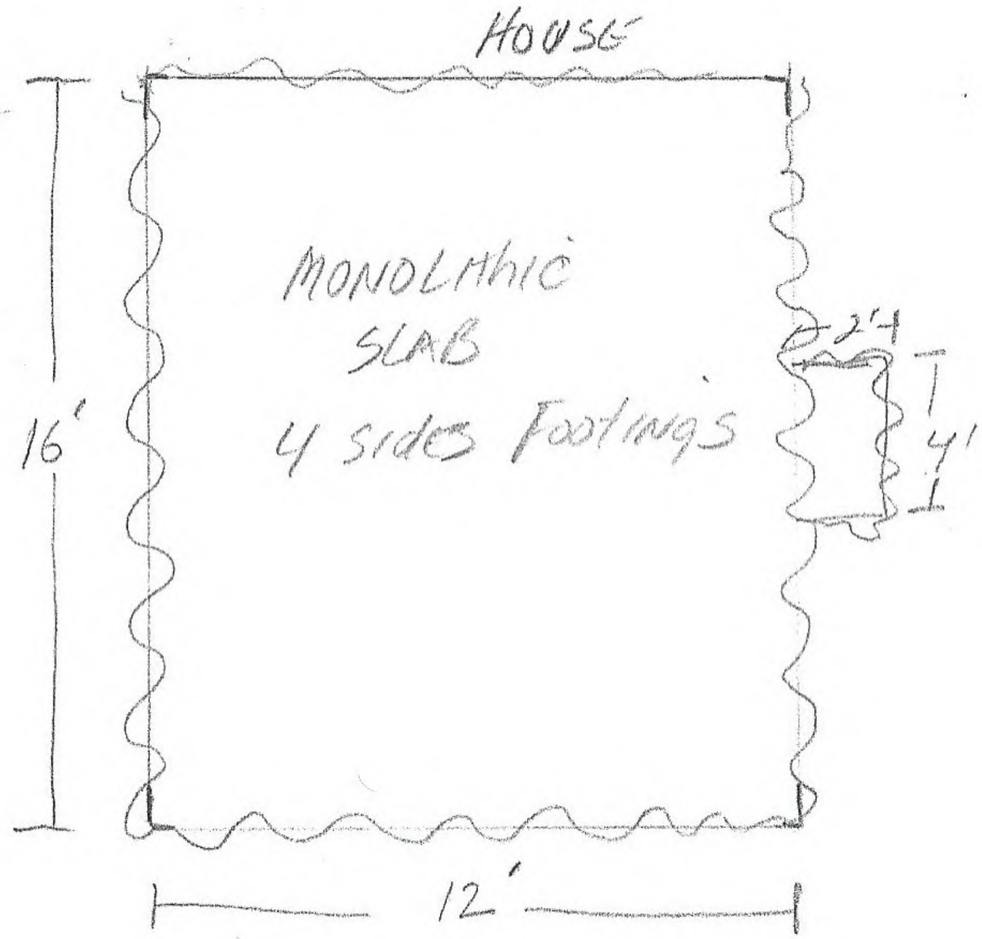

= FOOTINGS

1/4' = 1'0"

RELEASED FOR CONSTRUCTION

PROPOSED 608 HARRENDORF AVE. NE

PORCH DETAILS

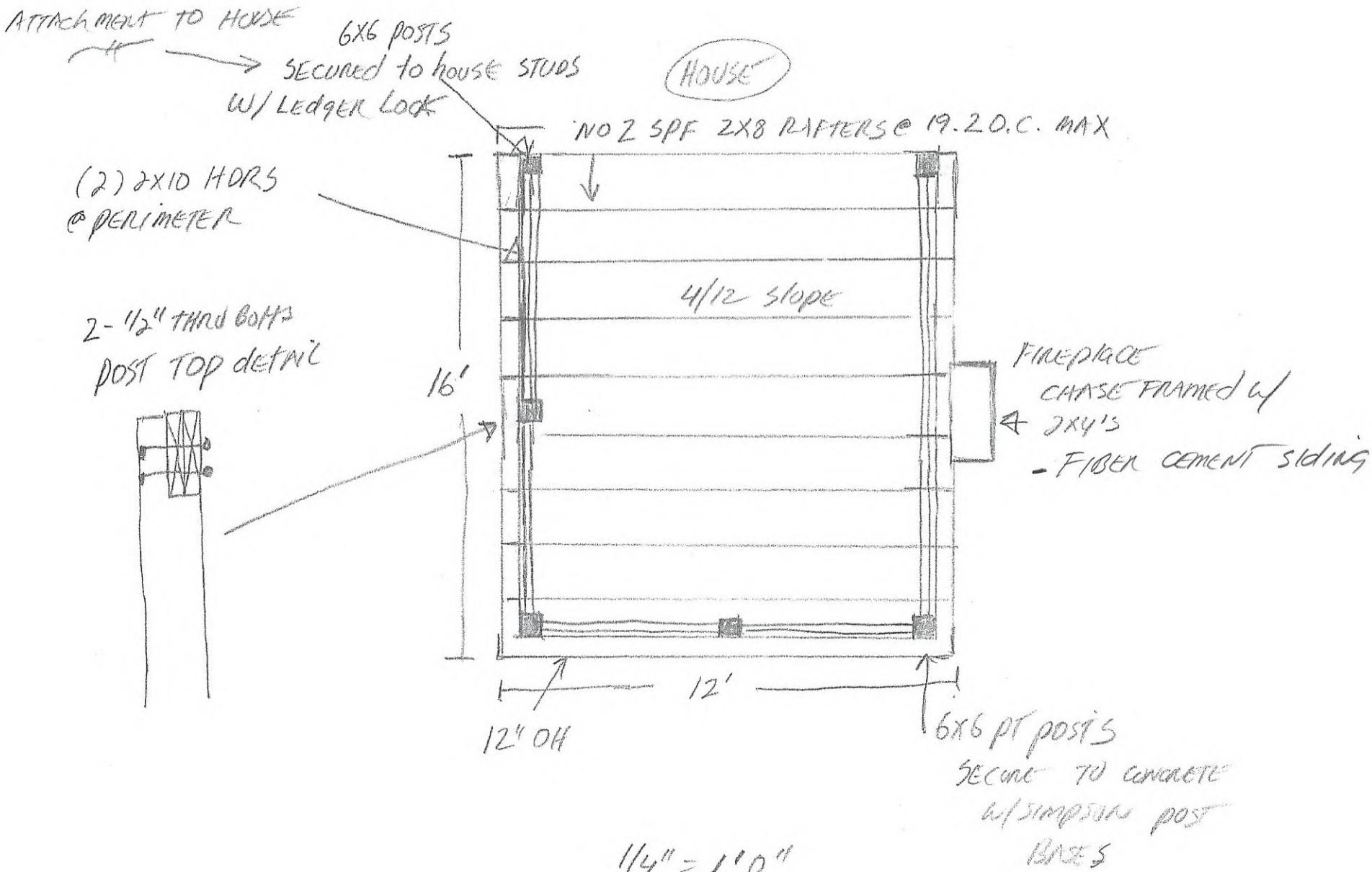

1/4" = 1'0"

RELEASED FOR CONSTRUCTION

PROPOSED 608 HARKENDORF AVE. N.E

CEILING FRAMING PLAN

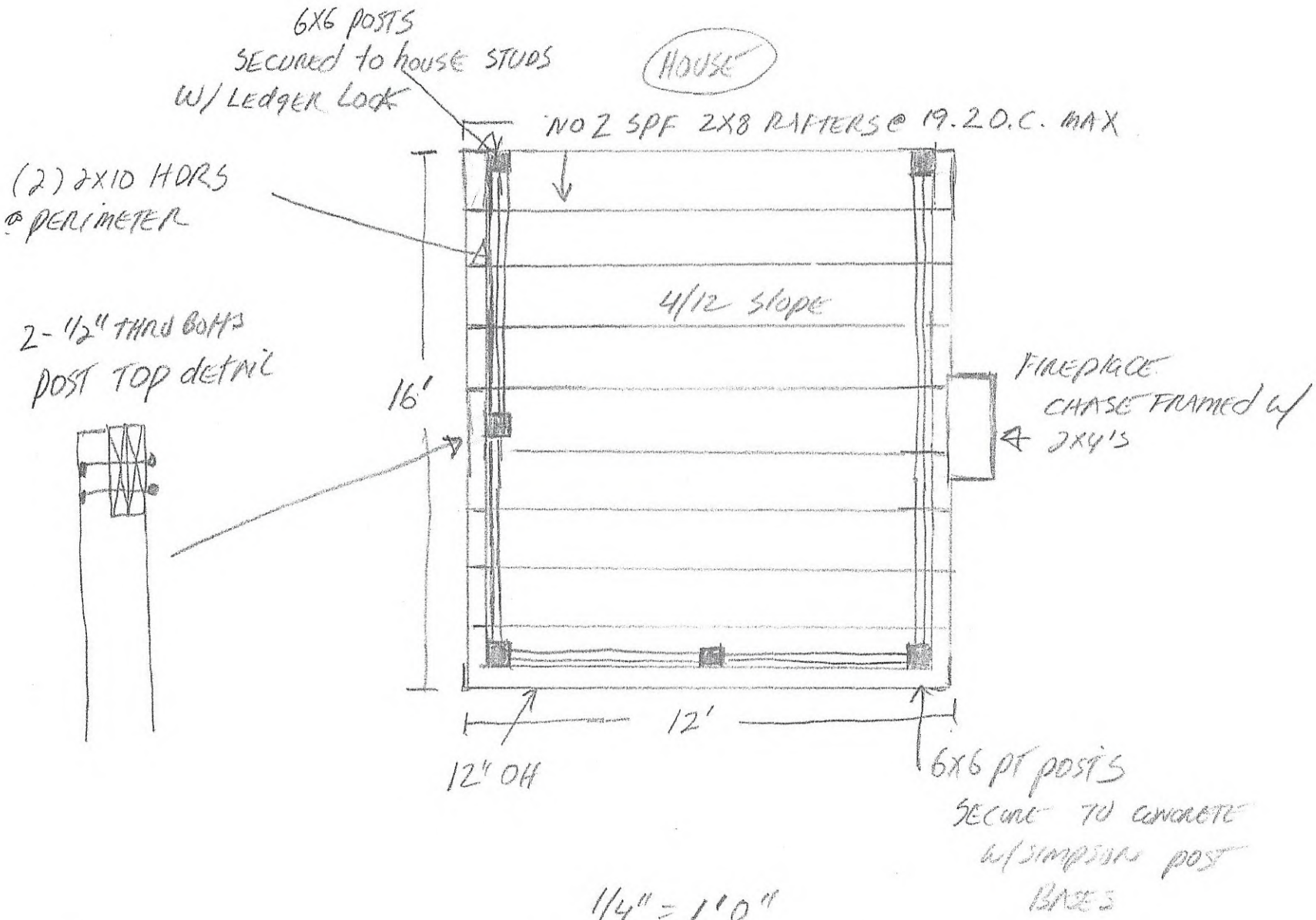

1/4" = 1'0"

RELEASED FOR CONSTRUCTION

PROPOSED 608 HARLENDORF AVE. NE

ROOF FRAMING PLAN

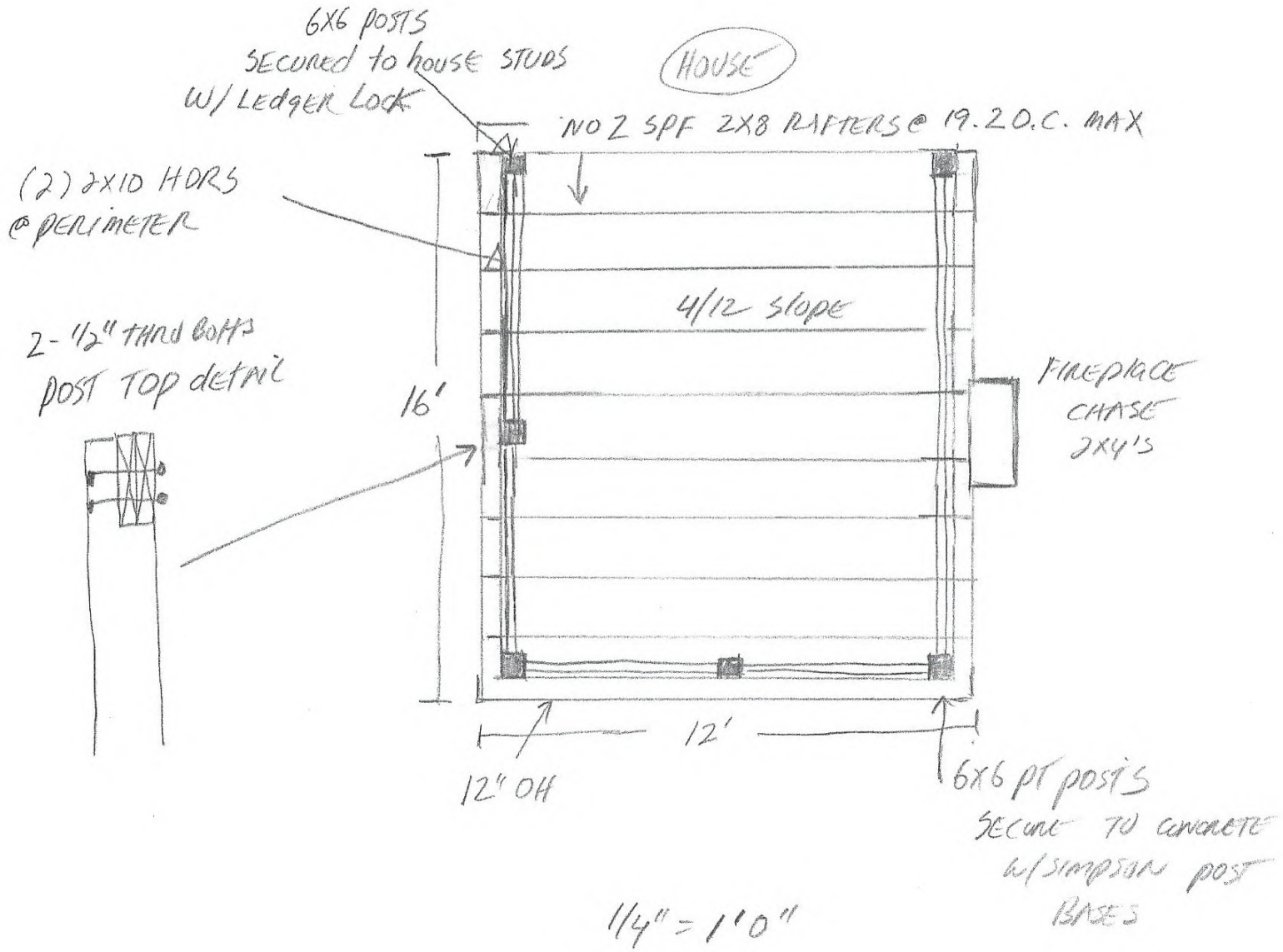

1/4" = 1'0"

RELEASED FOR CONSTRUCTION

PROPOSED

ROOF PLAN

608 HARDENDORF AVE NE

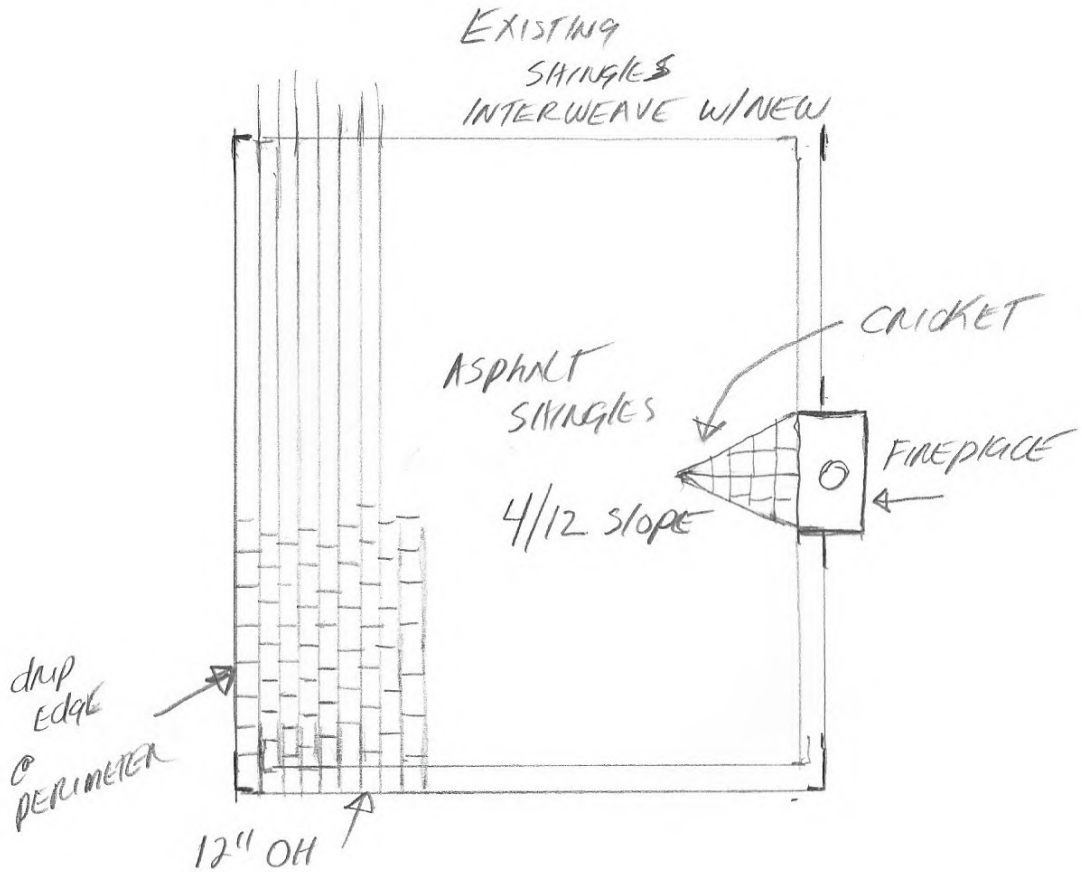

1/4" = 1'-0"

RELEASED FOR CONSTRUCTION

EXISTING

608 HARDENDORF AVE N.E

RELEASED FOR CONSTRUCTION

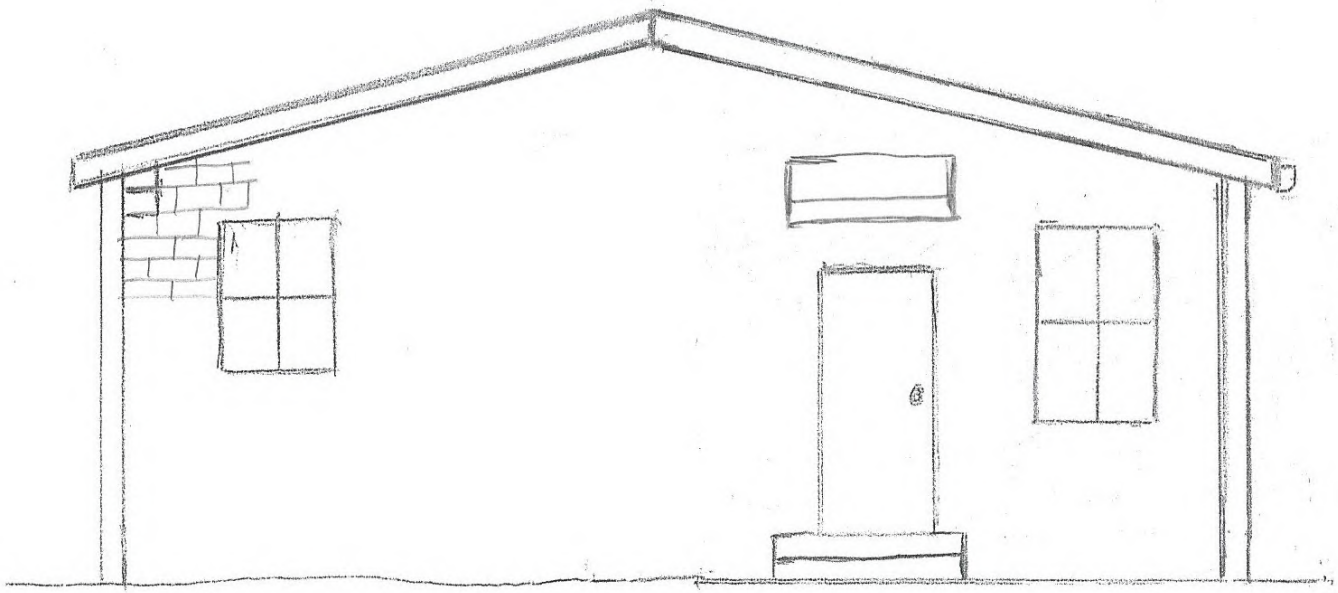

1/4" = 1'0"

proposed

608 Hardendorf Ave N.E

Released for construction

West Elevation

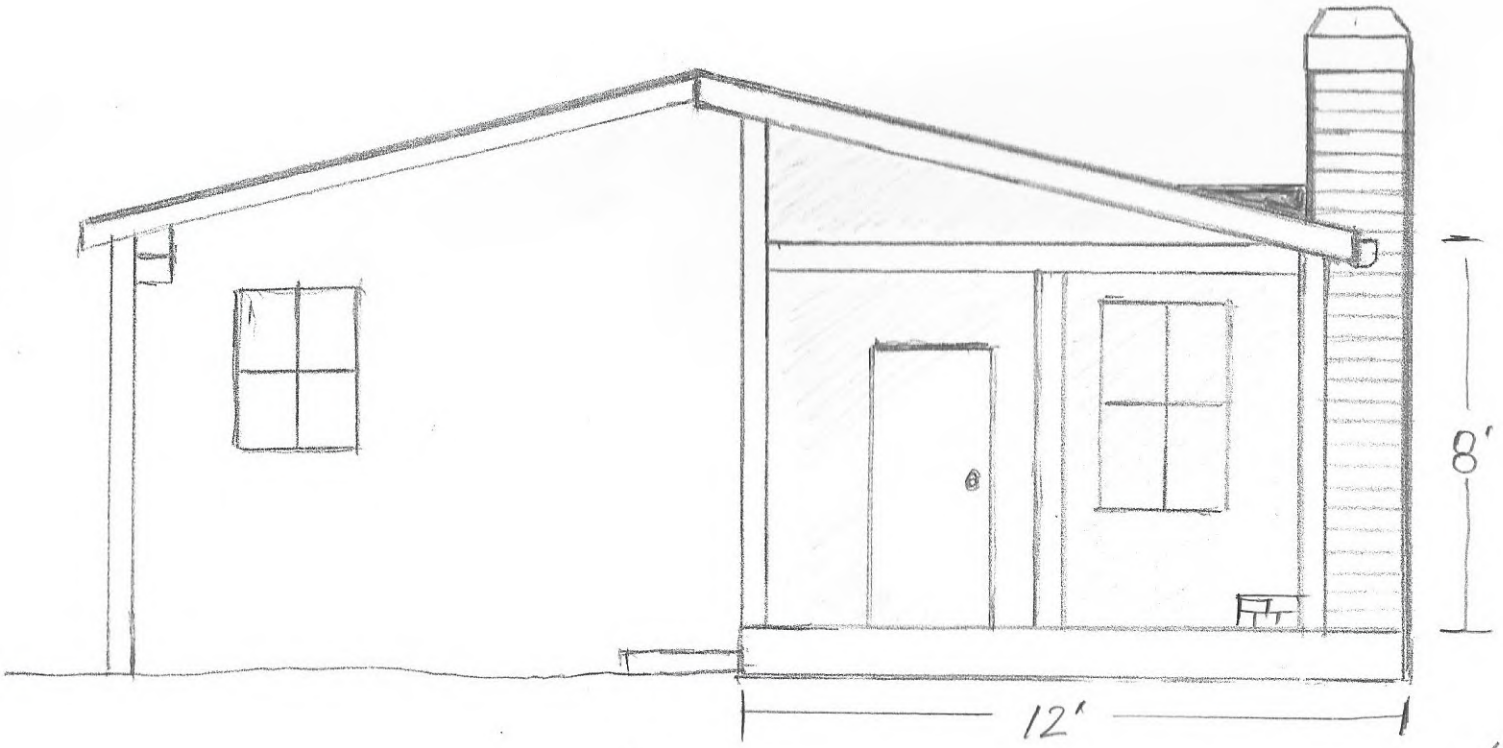

1/4" = 1'0"

PROPOSED

608 HARDENDORF AVE. N.E

SOUTH ELEVATION

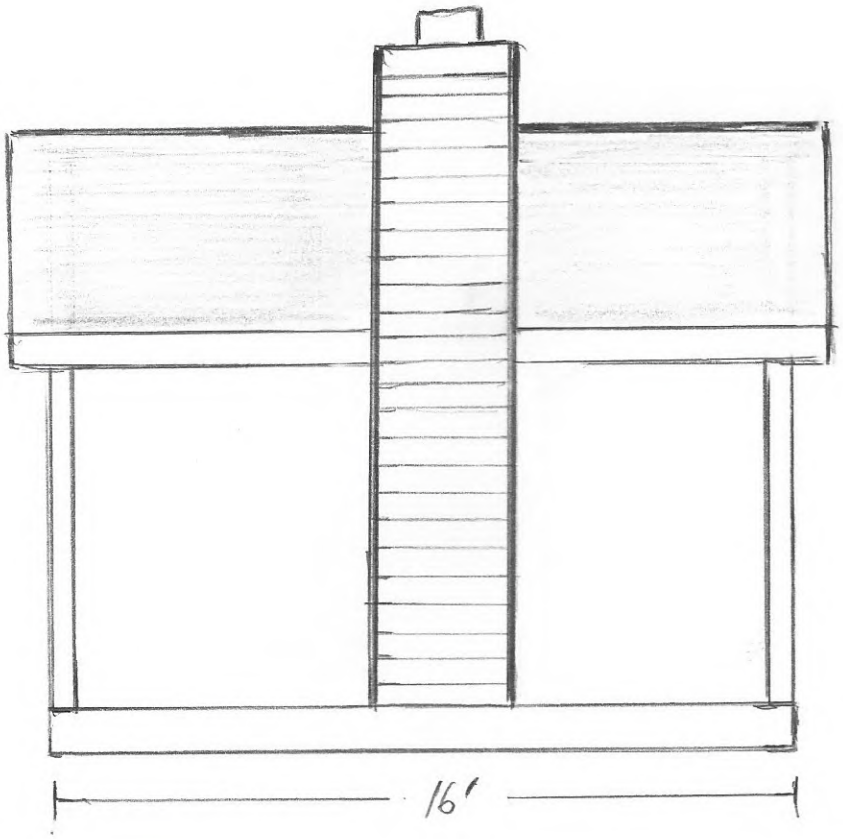

1/4" = 1'0"

RELEASED FOR CONSTRUCTION

Proposed

608 HARDENDORF AVE. N.E

NORTH ELEVATION

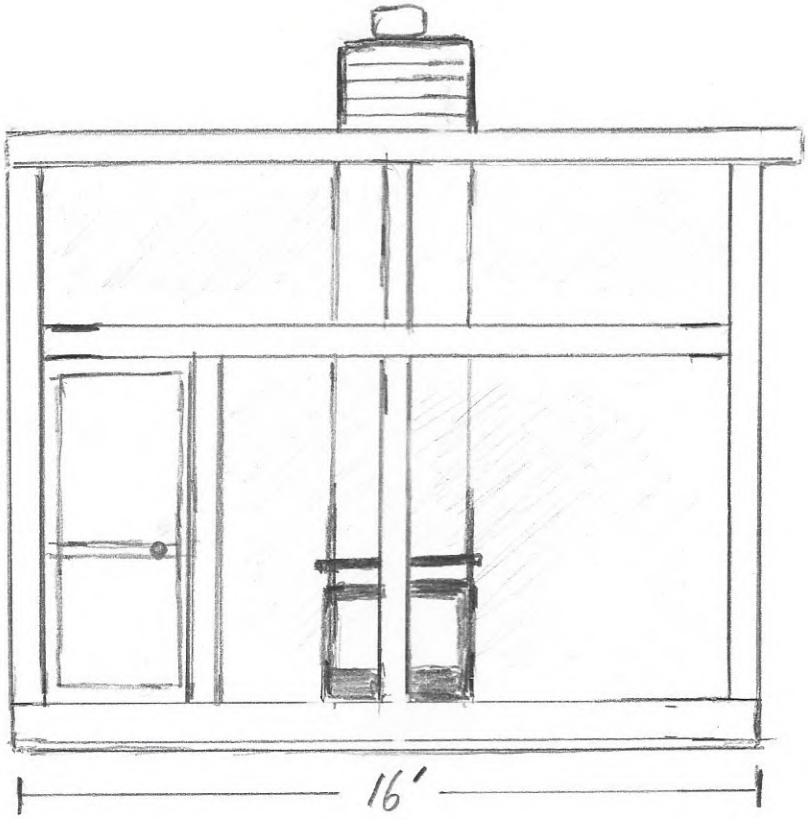

1/4" = 1'0"

RELEASED FOR CONSTRUCTION

PROPOSED

EAST ELEVATION

608 HARDENDORF AVE. N.E.

RELEASED FOR CONSTRUCTION

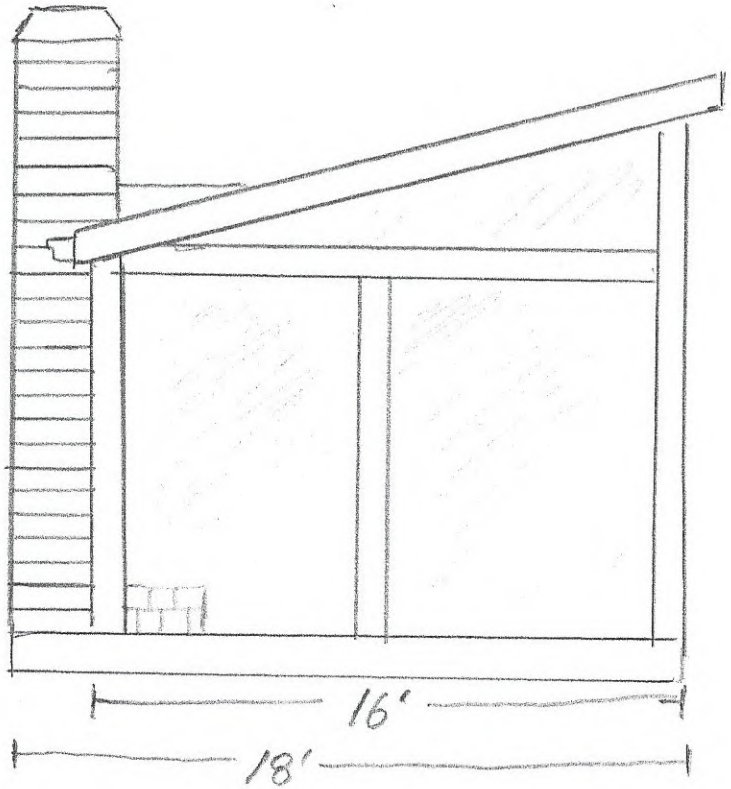

1/4" = 1'0"

EXISTING

SITE PLAN

608 HARDENDORF AVE. N.E
ATLANTA, GA 30307

EXISTING LOT COVERAGE

HOUSE - 1769 SF
STONE PATIO - 255 SF
FRONT WALK - 172 SF
WALLS - 240 SF
TURF - 238 SF
GRAVEL WALK - 66 SF
GARAGE - 335 SF
DRIVE WAY - 1552 SF

TOTAL - 4627 SF

4627/7490 = 61.77%

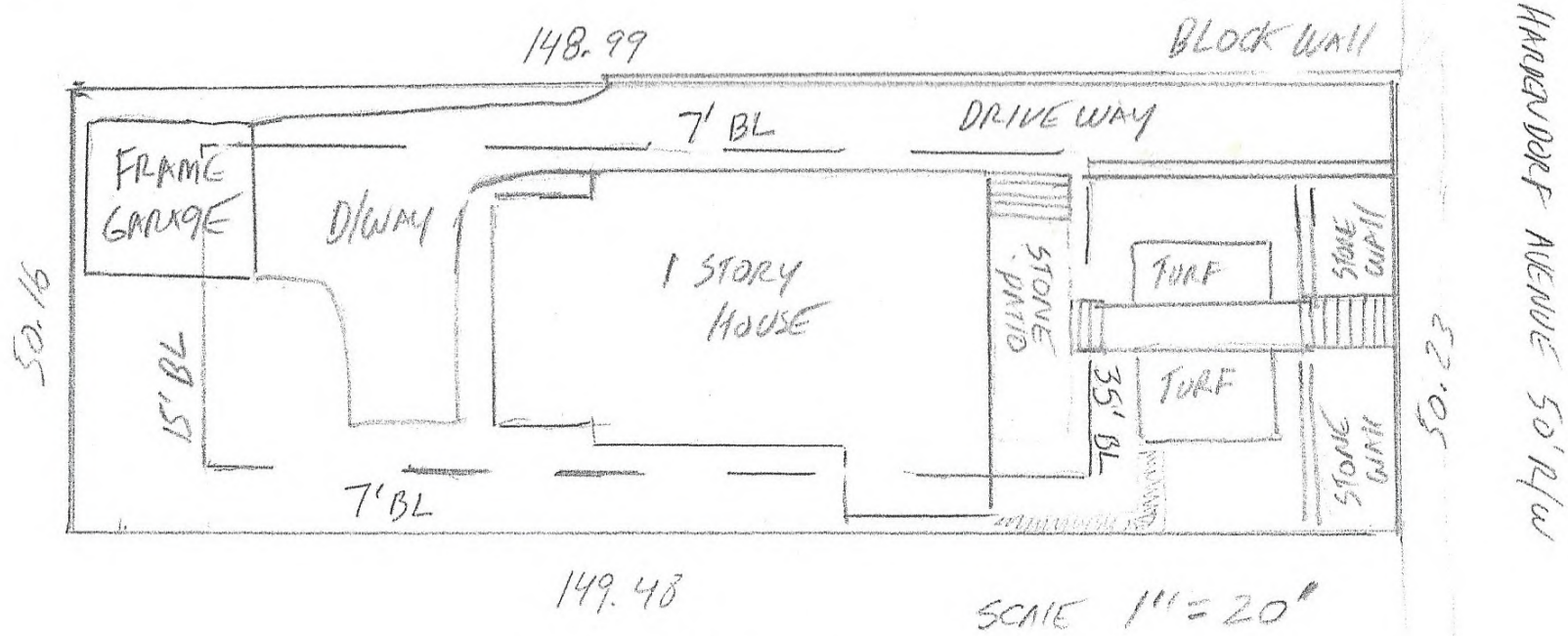

SCALE 1" = 20'

RELEASED FOR CONSTRUCTION

proposed

EXISTING LOT COVERAGE

HOUSE - 1769 SF
STONE PATIO - 255 SF
FRONT WALK - 172 SF
WALLS - 240 SF
TURF - 238 SF
GRAVEL WALK - 66 SF
GARAGE - 335 SF
DRIVE WAY - 1552 SF

TOTAL - 4627 SF

4627/7490 = 61.77%

SITE PLAN
"
608 HARDENDORF AVE. N.E
ATLANTA, GA 30307

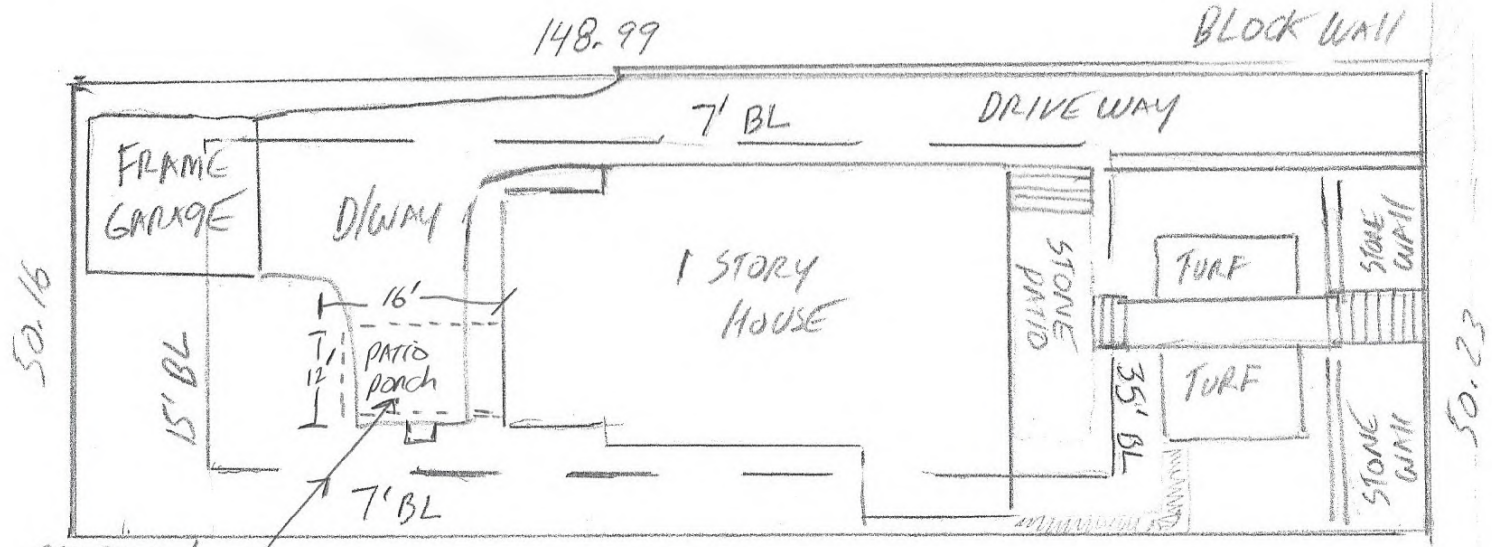

PROPOSED
16X12 PATIO OVER
EXISTING DRIVEWAY

* NO NEW IMPERVIOUS SURFACE WILL BE ADDED

SCALE 1" = 20'

RELEASED FOR CONSTRUCTION

HOUSE FLOOR PLAN
608 HARDENDORF AVE
RELEASED FOR CONSTRUCTION

EXISTING

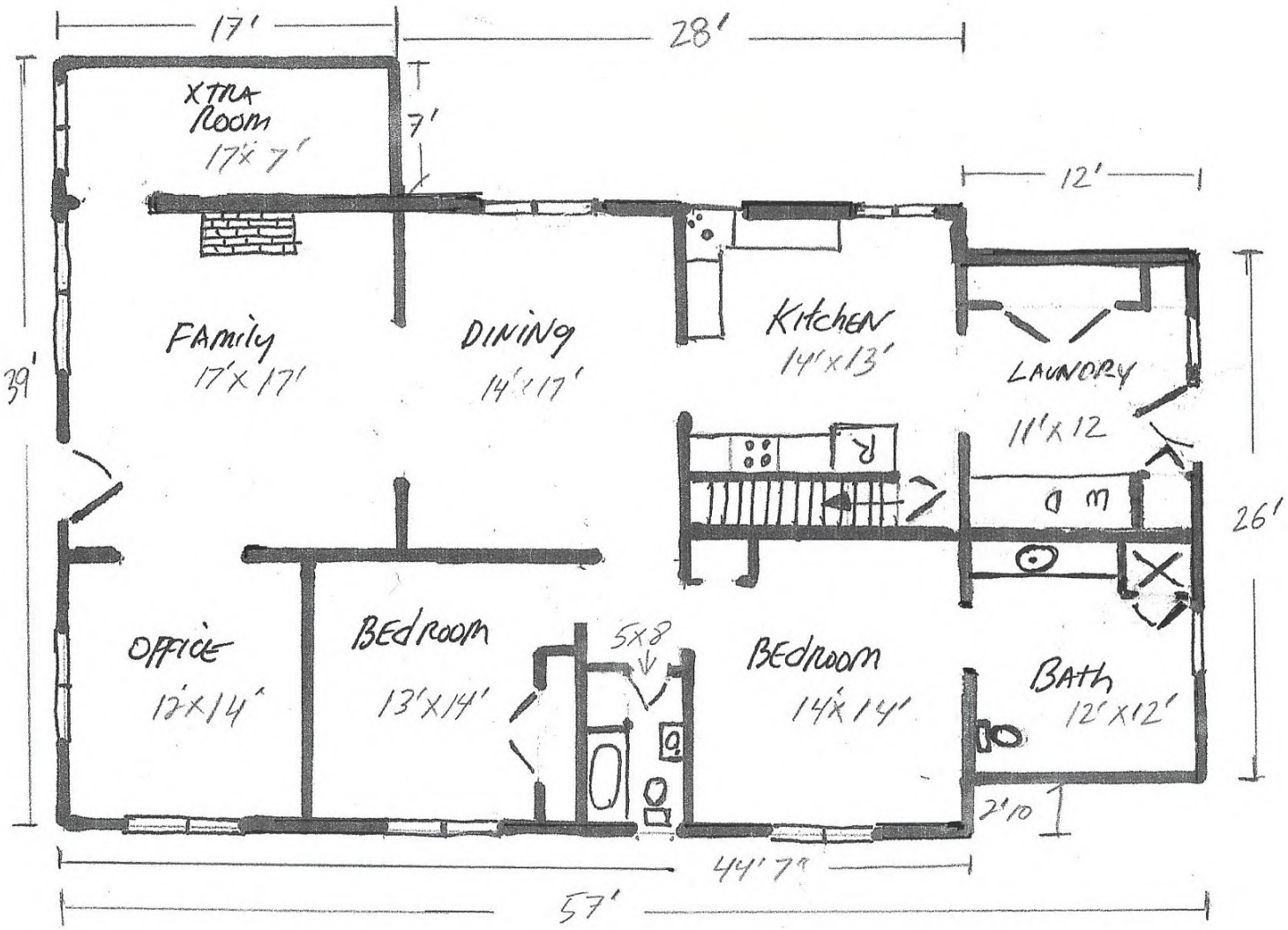

1/8" = 1'

HOUSE FLOOR PLAN
608 HARDENDORF AVE
RELEASED FOR CONSTRUCTION
PROPOSED

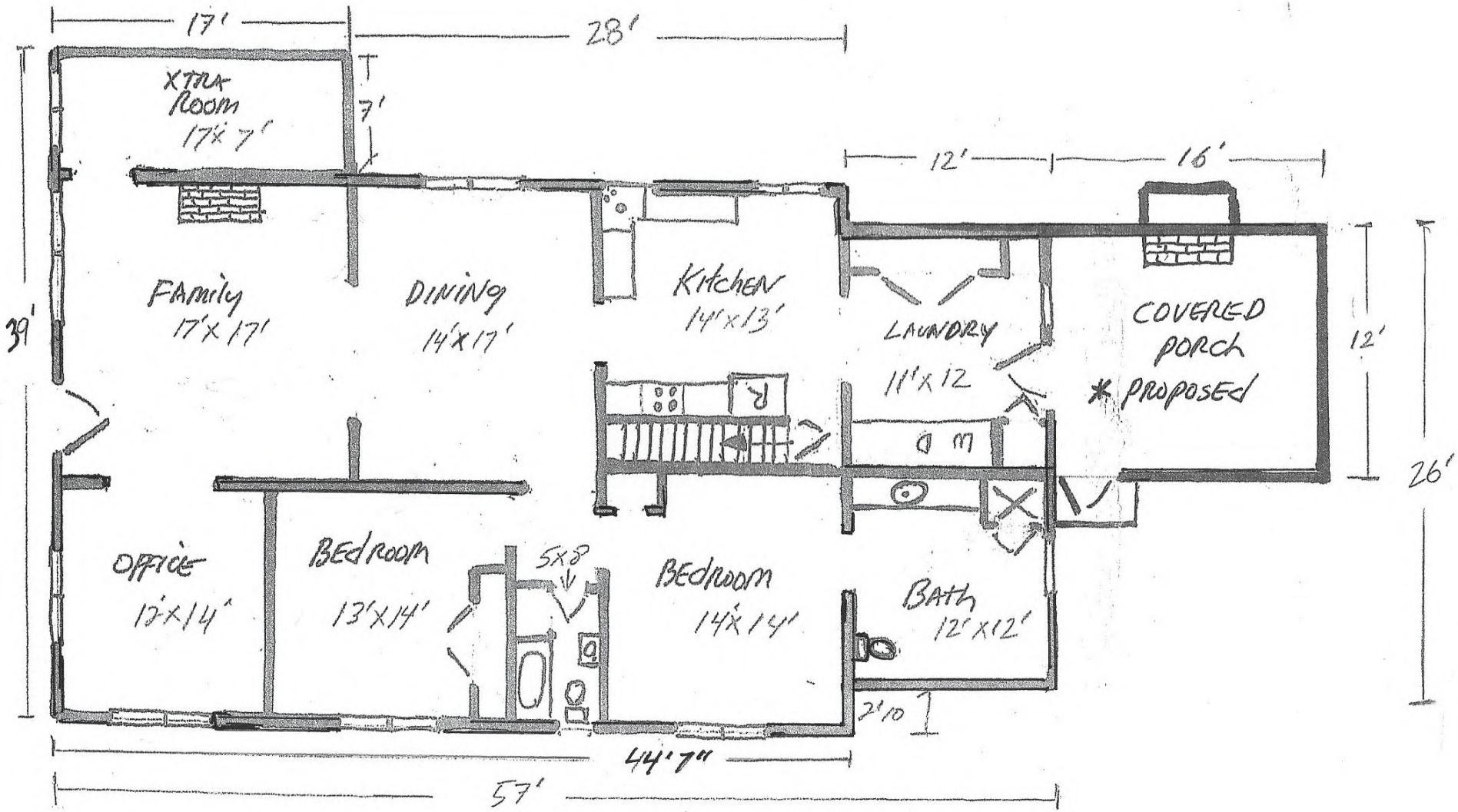

1/8" = 1'

608 Hardendorf Ave NE

Houses across Hardendorf from 608 Hardendorf.

V-26-126
City of Atlanta | Department of City Planning
OFFICE OF ZONING & DEVELOPMENT
RECEIVED
DATE: 8/5/2026

V-26-126

City of Atlanta | Department of City Planning
OFFICE OF ZONING & DEVELOPMENT

RECEIVED

DATE: 8/5/2026

V-26-126

City of Atlanta | Department of City Planning
OFFICE OF ZONING & DEVELOPMENT

RECEIVED

DATE: 8/5/2026

V-26-126

City of Atlanta | Department of City Planning
OFFICE OF ZONING & DEVELOPMENT

RECEIVED

DATE: 8/5/2026

V-26-126

City of Atlanta | Department of City Planning
OFFICE OF ZONING & DEVELOPMENT

RECEIVED

DATE: 8/5/2026

V-26-126

City of Atlanta | Department of City Planning
OFFICE OF ZONING & DEVELOPMENT

RECEIVED

DATE: 8/5/2026

V-26-126

City of Atlanta | Department of City Planning
OFFICE OF ZONING & DEVELOPMENT

RECEIVED

DATE: 8/5/2026

Acknowledged and Supports Application

No Response as of 9.20.2026

Our House (608 Hardendorf)

586 Hardendorf Ave NE - Mark Johnson & Jennifer Burns

589 Clifton Rd NE - David Kane

Eli & Wrenn Awbrey
608 Hardendorf Ave NE, Atlanta, GA 30307
678-850-7696
eli.w.awbrey@gmail.com

August 29, 2026

Re: Proposed Back Screened Porch - 608 Hardendorf Ave NE - Variance Request No. V–26-126

Dear Neighbor,

We are hoping to build a 12' x 16' screened porch behind our home at 608 Hardendorf. It will be built on top of an existing concrete pad that is currently an extra rear parking spot. The roof line of the new porch will tie into the existing roof line and will match the height of the existing roof. We had an arborist out to verify that no existing trees will be disturbed by this project.

These plans require a variance because our property was over the 50% impervious surface threshold when we acquired it. The porch project actually reduces the impervious surface percentage of our property, though–because we removed an existing gazebo and some concrete pavers that surrounded the gazebo, and, as mentioned, the porch will be built on an existing concrete pad.

These plans will be presented first at the Thursday, September 17th meeting of the Lake Claire Neighbors (LCN). Monthly meetings of LCN are hybrid—both in-person at the Frazer Center, 1815 S Ponce de Leon Avenue, *and* via Zoom. Meetings begin at 7:15 pm sharp. After that, these plans will be presented at the Neighborhood Planning Unit – N (NPU-N) meeting on Thursday, September 24th at 7pm, via Zoom.

Should you have any questions about this project, please feel free to contact us at the contact information listed above.

Sincerely,

Eli and Wrenn Awbrey

Acknowledgement of Notification:
I have been made aware of variance request # V-26-126 and given the opportunity to comment on the proposal.

☑ I support the request

☐ I do not support the request

☐ I have questions

☐ I have been informed but have no opinion

Signature of LCN member

DAVID KANE
Printed Name of LCN member

589 CLIFTON RD NE
ATLANTA, 30307
Address of LCN member

591 Hardendorf Ave NE - Jeoffrey & Min Levine

Eli & Wrenn Awbrey
608 Hardendorf Ave NE, Atlanta, GA 30307
678-850-7696
eli.w.awbrey@gmail.com

August 29, 2026

Re: Proposed Back Screened Porch - 608 Hardendorf Ave NE - Variance Request No. V–26-126

Dear Neighbor,

We are hoping to build a 12' x 16' screened porch behind our home at 608 Hardendorf. It will be built on top of an existing concrete pad that is currently an extra rear parking spot. The roof line of the new porch will tie into the existing roof line and will match the height of the existing roof. We had an arborist out to verify that no existing trees will be disturbed by this project.

These plans require a variance because our property was over the 50% impervious surface threshold when we acquired it. The porch project actually reduces the impervious surface percentage of our property, though–because we removed an existing gazebo and some concrete pavers that surrounded the gazebo, and, as mentioned, the porch will be built on an existing concrete pad.

These plans will be presented first at the Thursday, September 17th meeting of the Lake Claire Neighbors (LCN). Monthly meetings of LCN are hybrid—both in-person at the Frazer Center, 1815 S Ponce de Leon Avenue, *and* via Zoom. Meetings begin at 7:15 pm sharp. After that, these plans will be presented at the Neighborhood Planning Unit – N (NPU-N) meeting on Thursday, September 24th at 7pm, via Zoom.

Should you have any questions about this project, please feel free to contact us at the contact information listed above.

Sincerely,

Eli and Wrenn Awbrey

Acknowledgement of Notification:
I have been made aware of variance request # V-26-126 and given the opportunity to comment on the proposal.

☒ I support the request

☐ I do not support the request

☐ I have questions

☐ I have been informed but have no opinion

Signature of LCN member	BETH CHAMP Printed Name of LCN member	592 HARDENDORF Address of LCN member

Eli & Wrenn Awbrey
608 Hardendorf Ave NE, Atlanta, GA 30307
678-850-7696
eli.w.awbrey@gmail.com

August 29, 2026

Re: Proposed Back Screened Porch - 608 Hardendorf Ave NE - Variance Request No. V–26-126

Dear Neighbor,

We are hoping to build a 12' x 16' screened porch behind our home at 608 Hardendorf. It will be built on top of an existing concrete pad that is currently an extra rear parking spot. The roof line of the new porch will tie into the existing roof line and will match the height of the existing roof. We had an arborist out to verify that no existing trees will be disturbed by this project.

These plans require a variance because our property was over the 50% impervious surface threshold when we acquired it. The porch project actually reduces the impervious surface percentage of our property, though–because we removed an existing gazebo and some concrete pavers that surrounded the gazebo, and, as mentioned, the porch will be built on an existing concrete pad.

These plans will be presented first at the Thursday, September 17th meeting of the Lake Claire Neighbors (LCN). Monthly meetings of LCN are hybrid—both in-person at the Frazer Center, 1815 S Ponce de Leon Avenue, *and* via Zoom. Meetings begin at 7:15 pm sharp. After that, these plans will be presented at the Neighborhood Planning Unit – N (NPU-N) meeting on Thursday, September 24th at 7pm, via Zoom.

Should you have any questions about this project, please feel free to contact us at the contact information listed above.

Sincerely,

Eli and Wrenn Awbrey

Acknowledgement of Notification:
I have been made aware of variance request # V-26-126 and given the opportunity to comment on the proposal.

☒ I support the request

☐ I do not support the request

☐ I have questions

☐ I have been informed but have no opinion

John Downey	John Downey	601 Hardendorf Ave NE ATL, GA, 30307
Signature of LCN member	Printed Name of LCN member	Address of LCN member

602 Hardendorf Ave NE - James & Kelly Crutcher

Eli & Wrenn Awbrey
608 Hardendorf Ave NE, Atlanta, GA 30307
678-850-7696
eli.w.awbrey@gmail.com

August 29, 2026

Re: Proposed Back Screened Porch - 608 Hardendorf Ave NE - Variance Request No. V–26-126

Dear Neighbor,

We are hoping to build a 12' x 16' screened porch behind our home at 608 Hardendorf. It will be built on top of an existing concrete pad that is currently an extra rear parking spot. The roof line of the new porch will tie into the existing roof line and will match the height of the existing roof. We had an arborist out to verify that no existing trees will be disturbed by this project.

These plans require a variance because our property was over the 50% impervious surface threshold when we acquired it. The porch project actually reduces the impervious surface percentage of our property, though–because we removed an existing gazebo and some concrete pavers that surrounded the gazebo, and, as mentioned, the porch will be built on an existing concrete pad.

These plans will be presented first at the Thursday, September 17th meeting of the Lake Claire Neighbors (LCN). Monthly meetings of LCN are hybrid—both in-person at the Frazer Center, 1815 S Ponce de Leon Avenue, *and* via Zoom. Meetings begin at 7:15 pm sharp. After that, these plans will be presented at the Neighborhood Planning Unit – N (NPU-N) meeting on Thursday, September 24th at 7pm, via Zoom.

Should you have any questions about this project, please feel free to contact us at the contact information listed above.

Sincerely,

Eli and Wrenn Awbrey

Acknowledgement of Notification:
I have been made aware of variance request # V-26-126 and given the opportunity to comment on the proposal.

☑ I support the request

☐ I do not support the request

☐ I have questions

☐ I have been informed but have no opinion

Signature of LCN member 8/29/26 — Printed Name of LCN member: James + Kelly Crutcher — Address of LCN member: 602 Hardendorf Ave Atlanta GA 30307

607 Hardendorf Ave NE - Ontario & Rian Smith

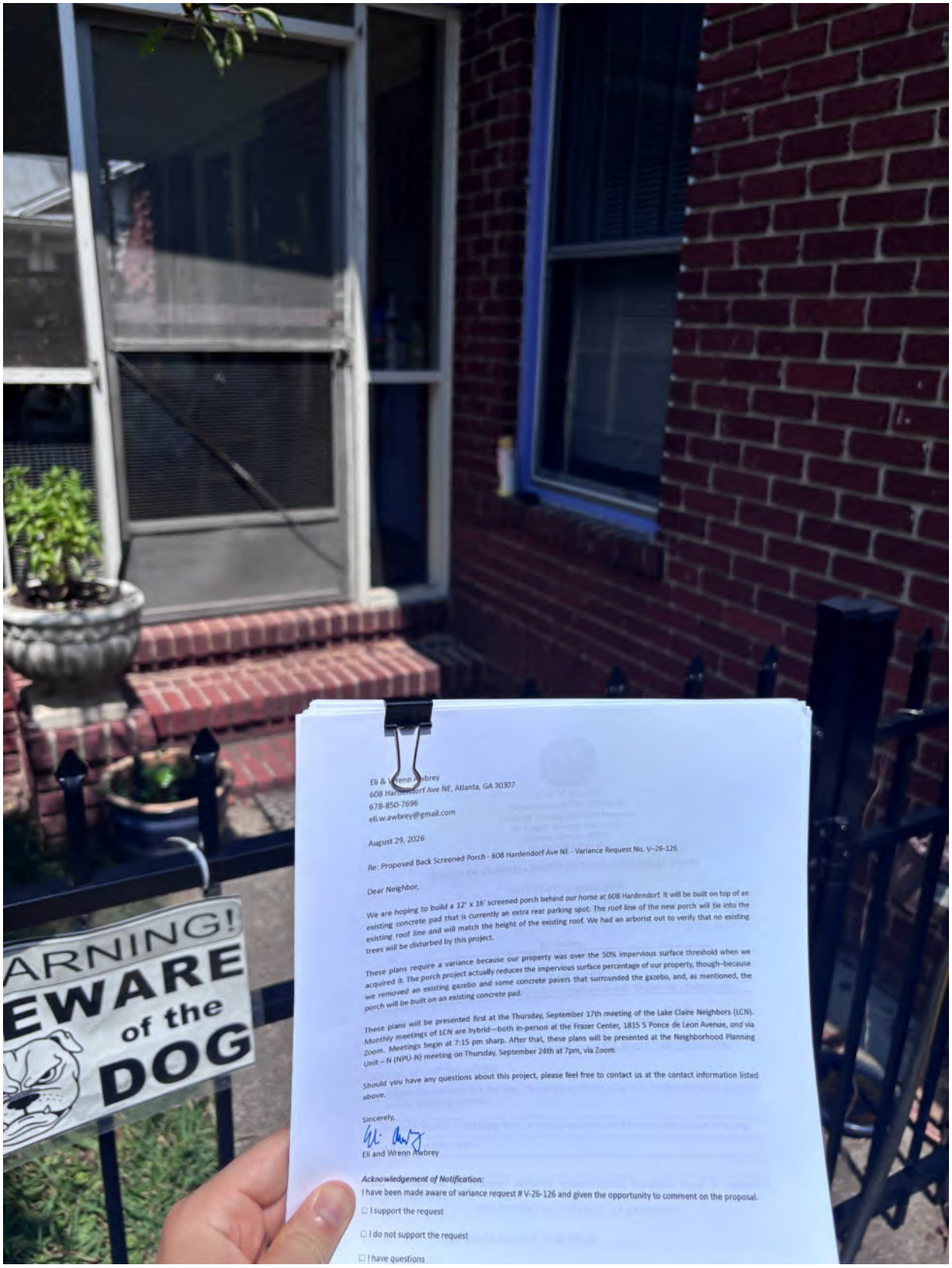

Eli & Wrenn Awbrey
608 Hardendorf Ave NE, Atlanta, GA 30307
678-850-7696
eli.w.awbrey@gmail.com

August 29, 2026

Re: Proposed Back Screened Porch - 608 Hardendorf Ave NE - Variance Request No. V–26-126

Dear Neighbor,

We are hoping to build a 12' x 16' screened porch behind our home at 608 Hardendorf. It will be built on top of an existing concrete pad that is currently an extra rear parking spot. The roof line of the new porch will tie into the existing roof line and will match the height of the existing roof. We had an arborist out to verify that no existing trees will be disturbed by this project.

These plans require a variance because our property was over the 50% impervious surface threshold when we acquired it. The porch project actually reduces the impervious surface percentage of our property, though–because we removed an existing gazebo and some concrete pavers that surrounded the gazebo, and, as mentioned, the porch will be built on an existing concrete pad.

These plans will be presented first at the Thursday, September 17th meeting of the Lake Claire Neighbors (LCN). Monthly meetings of LCN are hybrid—both in-person at the Frazer Center, 1815 S Ponce de Leon Avenue, and via Zoom. Meetings begin at 7:15 pm sharp. After that, these plans will be presented at the Neighborhood Planning Unit – N (NPU-N) meeting on Thursday, September 24th at 7pm, via Zoom.

Should you have any questions about this project, please feel free to contact us at the contact information listed above.

Sincerely,

Eli and Wrenn Awbrey

Acknowledgement of Notification:

I have been made aware of variance request # V-26-126 and given the opportunity to comment on the proposal.

☐ I support the request

☐ I do not support the request

☐ I have questions

611 Hardendorf Ave NE - Jay Wozniak & Addie Weber

Letter of Support - 612 Hardendorf Ave NE - Matt Ward

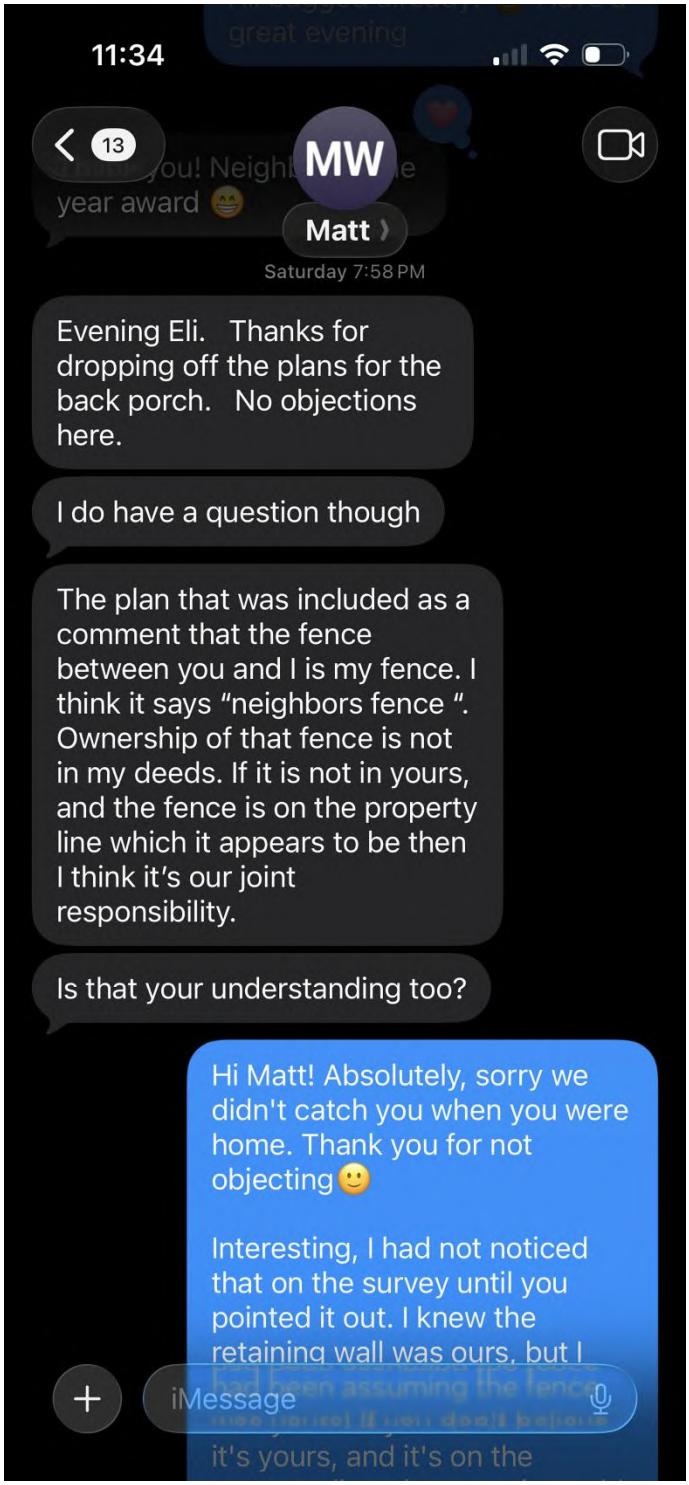

Eli & Wrenn Awbrey
608 Hardendorf Ave NE, Atlanta, GA 30307
678-850-7696
eli.w.awbrey@gmail.com

August 29, 2026

Re: Proposed Back Screened Porch - 608 Hardendorf Ave NE - Variance Request No. V–26-126

Dear Neighbor,

We are hoping to build a 12' x 16' screened porch behind our home at 608 Hardendorf. It will be built on top of an existing concrete pad that is currently an extra rear parking spot. The roof line of the new porch will tie into the existing roof line and will match the height of the existing roof. We had an arborist out to verify that no existing trees will be disturbed by this project.

These plans require a variance because our property was over the 50% impervious surface threshold when we acquired it. The porch project actually reduces the impervious surface percentage of our property, though–because we removed an existing gazebo and some concrete pavers that surrounded the gazebo, and, as mentioned, the porch will be built on an existing concrete pad.

These plans will be presented first at the Thursday, September 17th meeting of the Lake Claire Neighbors (LCN). Monthly meetings of LCN are hybrid—both in-person at the Frazer Center, 1815 S Ponce de Leon Avenue, *and* via Zoom. Meetings begin at 7:15 pm sharp. After that, these plans will be presented at the Neighborhood Planning Unit – N (NPU-N) meeting on Thursday, September 24th at 7pm, via Zoom.

Should you have any questions about this project, please feel free to contact us at the contact information listed above.

Sincerely,

Eli and Wrenn Awbrey

Acknowledgement of Notification:
I have been made aware of variance request # V-26-126 and given the opportunity to comment on the proposal.

☑ I support the request

☐ I do not support the request

☐ I have questions

☐ I have been informed but have no opinion

Signature of LCN member	Printed Name of LCN member	Address of LCN member
	SIMON BRICENO	616 HARDENDORF AVE.

617 Hardendorf Ave NE - Alison Amoroso

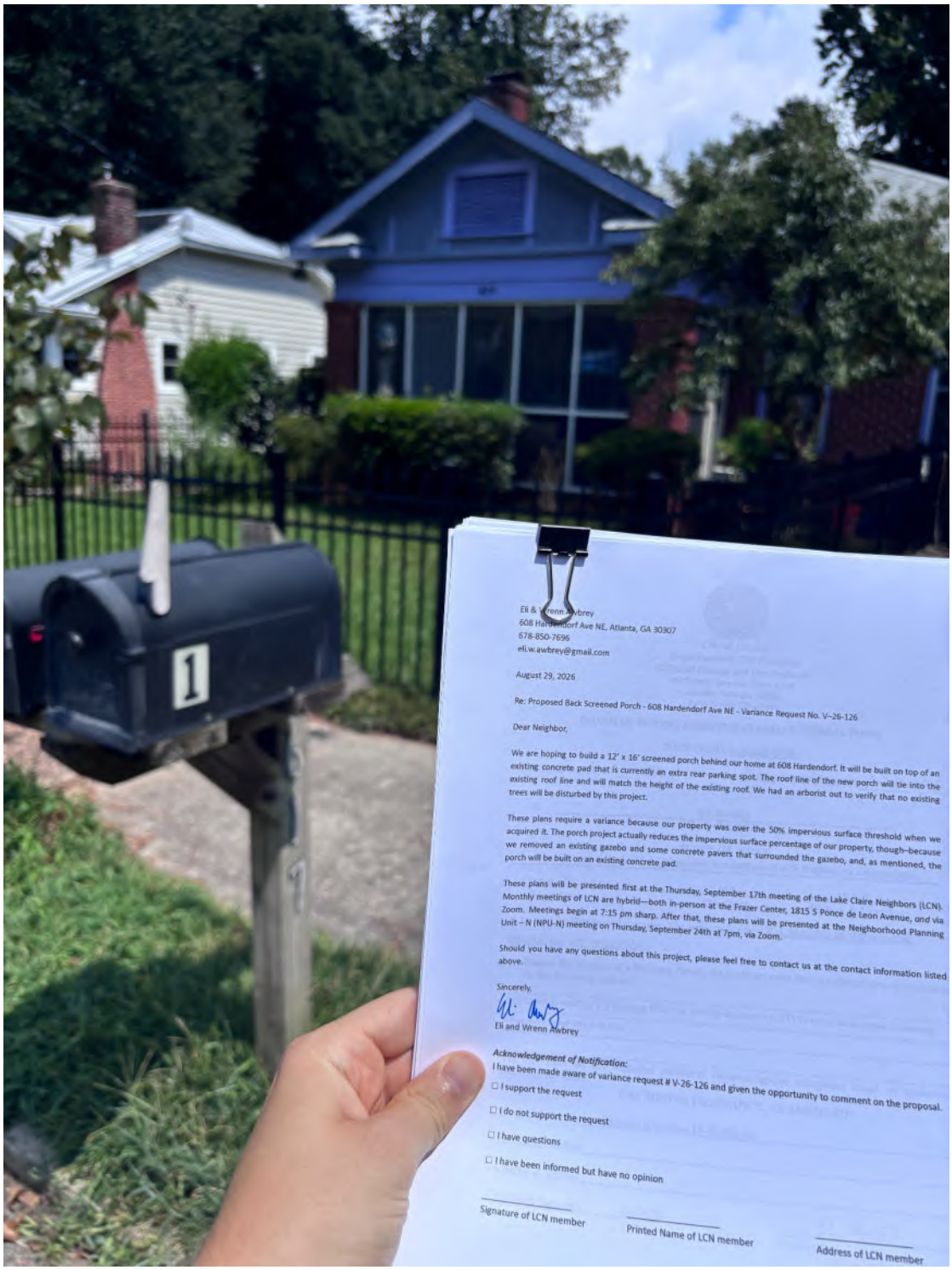

Eli & Wrenn Awbrey
608 Hardendorf Ave NE, Atlanta, GA 30307
678-850-7696
eli.w.awbrey@gmail.com

August 29, 2026

Re: Proposed Back Screened Porch - 608 Hardendorf Ave NE - Variance Request No. V–26-126

Dear Neighbor,

We are hoping to build a 12' x 16' screened porch behind our home at 608 Hardendorf. It will be built on top of an existing concrete pad that is currently an extra rear parking spot. The roof line of the new porch will tie into the existing roof line and will match the height of the existing roof. We had an arborist out to verify that no existing trees will be disturbed by this project.

These plans require a variance because our property was over the 50% impervious surface threshold when we acquired it. The porch project actually reduces the impervious surface percentage of our property, though–because we removed an existing gazebo and some concrete pavers that surrounded the gazebo, and, as mentioned, the porch will be built on an existing concrete pad.

These plans will be presented first at the Thursday, September 17th meeting of the Lake Claire Neighbors (LCN). Monthly meetings of LCN are hybrid—both in-person at the Frazer Center, 1815 S Ponce de Leon Avenue, and via Zoom. Meetings begin at 7:15 pm sharp. After that, these plans will be presented at the Neighborhood Planning Unit – N (NPU-N) meeting on Thursday, September 24th at 7pm, via Zoom.

Should you have any questions about this project, please feel free to contact us at the contact information listed above.

Sincerely,

Eli and Wrenn Awbrey

Acknowledgement of Notification:
I have been made aware of variance request # V-26-126 and given the opportunity to comment on the proposal.

☐ I support the request

☐ I do not support the request

☐ I have questions

☐ I have been informed but have no opinion

Signature of LCN member

Printed Name of LCN member

Address of LCN member

Eli & Wrenn Awbrey
608 Hardendorf Ave NE, Atlanta, GA 30307
678-850-7696
eli.w.awbrey@gmail.com

August 29, 2026

Re: Proposed Back Screened Porch - 608 Hardendorf Ave NE - Variance Request No. V–26-126

Dear Neighbor,

We are hoping to build a 12' x 16' screened porch behind our home at 608 Hardendorf. It will be built on top of an existing concrete pad that is currently an extra rear parking spot. The roof line of the new porch will tie into the existing roof line and will match the height of the existing roof. We had an arborist out to verify that no existing trees will be disturbed by this project.

These plans require a variance because our property was over the 50% impervious surface threshold when we acquired it. The porch project actually reduces the impervious surface percentage of our property, though–because we removed an existing gazebo and some concrete pavers that surrounded the gazebo, and, as mentioned, the porch will be built on an existing concrete pad.

These plans will be presented first at the Thursday, September 17th meeting of the Lake Claire Neighbors (LCN). Monthly meetings of LCN are hybrid—both in-person at the Frazer Center, 1815 S Ponce de Leon Avenue, *and* via Zoom. Meetings begin at 7:15 pm sharp. After that, these plans will be presented at the Neighborhood Planning Unit – N (NPU-N) meeting on Thursday, September 24th at 7pm, via Zoom.

Should you have any questions about this project, please feel free to contact us at the contact information listed above.

Sincerely,

Eli and Wrenn Awbrey

Acknowledgement of Notification:
I have been made aware of variance request # V-26-126 and given the opportunity to comment on the proposal.

☒ I support the request

☐ I do not support the request

☐ I have questions

☐ I have been informed but have no opinion

Signature of LCN member	Printed Name of LCN member	Address of LCN member
	Caroline Rumley	621 Hardendorf Ave
	Hiram Maxim	621 Hardendorf Ave

622 Hardendorf Ave NE - Kerry Lucasse

601 Clifton Rd NE - John & Lauren Kelly

Eli & Wrenn Awbrey
608 Hardendorf Ave NE, Atlanta, GA 30307
678-850-7696
eli.w.awbrey@gmail.com

August 29, 2026

Re: Proposed Back Screened Porch - 608 Hardendorf Ave NE - Variance Request No. V–26-126

Dear Neighbor,

We are hoping to build a 12' x 16' screened porch behind our home at 608 Hardendorf. It will be built on top of an existing concrete pad that is currently an extra rear parking spot. The roof line of the new porch will tie into the existing roof line and will match the height of the existing roof. We had an arborist out to verify that no existing trees will be disturbed by this project.

These plans require a variance because our property was over the 50% impervious surface threshold when we acquired it. The porch project actually reduces the impervious surface percentage of our property, though–because we removed an existing gazebo and some concrete pavers that surrounded the gazebo, and, as mentioned, the porch will be built on an existing concrete pad.

These plans will be presented first at the Thursday, September 17th meeting of the Lake Claire Neighbors (LCN). Monthly meetings of LCN are hybrid—both in-person at the Frazer Center, 1815 S Ponce de Leon Avenue, *and* via Zoom. Meetings begin at 7:15 pm sharp. After that, these plans will be presented at the Neighborhood Planning Unit – N (NPU-N) meeting on Thursday, September 24th at 7pm, via Zoom.

Should you have any questions about this project, please feel free to contact us at the contact information listed above.

Sincerely,

Eli and Wrenn Awbrey

Acknowledgement of Notification:
I have been made aware of variance request # V-26-126 and given the opportunity to comment on the proposal.

☒ I support the request

☐ I do not support the request

☐ I have questions

☐ I have been informed but have no opinion

Signature of LCN member

spencer brent
Printed Name of LCN member

607 Clifton RD NE
Address of LCN member

615 Clifton Rd NE - Kenneth Prince

623 Clifton Rd NE - Richard & Mary Holcomb